Die Form der Topplatte ist aus der 1:1 Geometrie- Zeichnung zu entnehmen.

## NORMALKIEL T = 1950 mm

**GEWICHTE**

FLOSSE (incl. TOP PLATTE) GRAUGUSS 861 KG
BULB BLEI 1497 KG

**MATERIALIEN**

BLEI MIT 3% ANTIMON
BOLZEN V4A STRECKGRENZE MIN 235 N/QMM

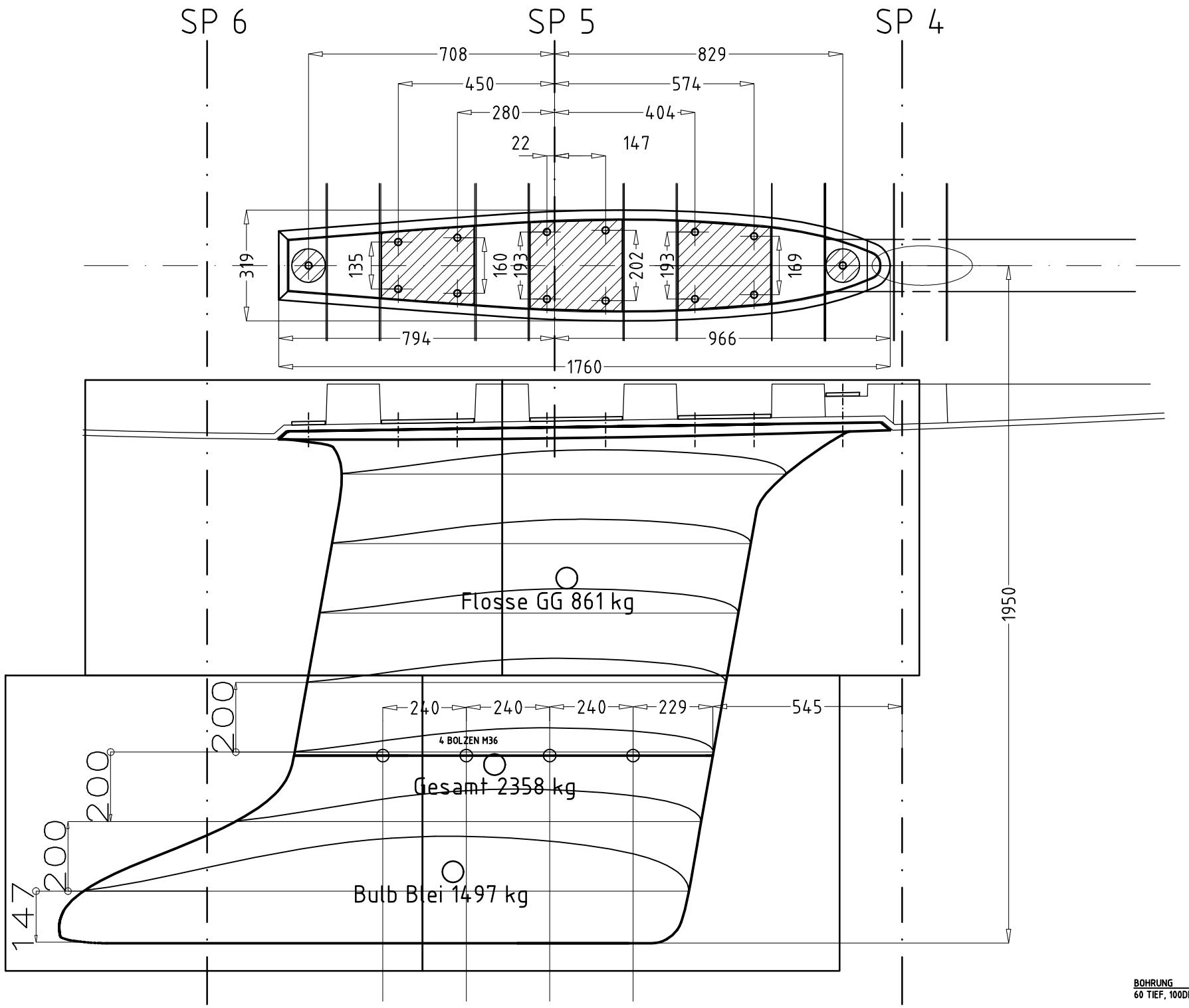


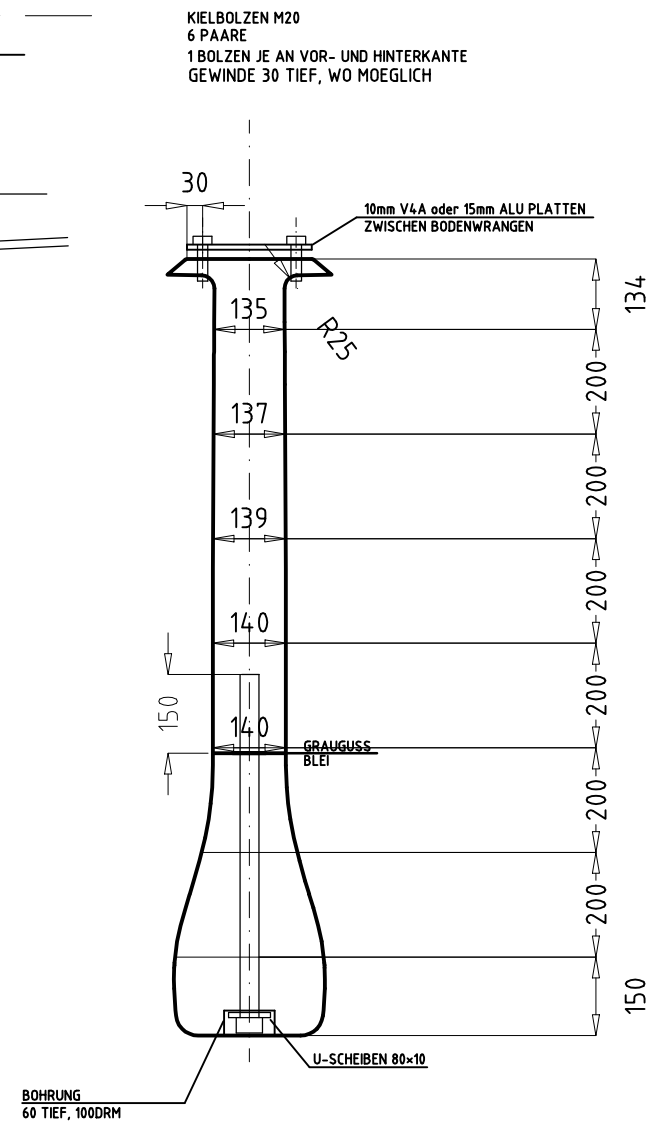


## PRINCIPAL DIMENSIONS

| | | |
|---|---|---|
| LOA | 10.95 | m |
| DWL | 9.95 | m |
| Bmax | 3.50 | m |
| DRAFT | 1.95 | m |
| DSPL | 6400 | kg |
| BALLAST | 2200 | kg |

| ISSUE | MODIFICATION | DATE | DRAWN BY | APPROVED |
|---|---|---|---|---|
| 1 | | 19-07-00 | ck | |


judel/vrolijk & co – PROPRIETARY

THE INFORMATION CONTAINED HEREON IS STRICTLY CONFIDENTIAL AND IS SUBJECT TO A CONFIDENTIALITY AGREEMENT AND A PERSON USING OR DISCLOSING THE INFORMATION CONTAINED HEREON IN BREACH OF SUCH AGREEMENT SHALL BE SUBJECT TO AN ACTION TO ENJOIN SUCH USE AND A SUIT FOR DAMAGES.


DUE TO BUILDING TOLERANCES ALL DIMENSIONS GIVEN ON THIS DRAWING ARE TO BE CHECKED ON THE BOAT

36' PRODUCTION-CRUISER

KONSTRUKTION NORMAL- KIEL

| SCALE | DIMENSION |
|---|---|
| 1 : 10 | mm |

| DRAWING NUMBER | SHEET |
|---|---|
| DE36 CK | 1 OF 1 |


judel/vrolijk & co - engineering gmbh

AM SEEDEICH 45
D-27572 BREMERHAVEN/GERMANY

TELEFON +49(0)471 97 123 95
TELEFAX +49(0)471 97 123 96